IS

SELF-CHARGING HYBRID

LEXUS
EXPERIENCE AMAZING

There is restricted availability of IS. For the availability of grades, packs, options, colours and trims please check with your Lexus Centre.

"Before starting work on the IS, my designers travelled the world, interviewing customers and searching for inspiration. This research phase was vital, as we were challenged with taking the already successful IS to the next level."

IS CHIEF ENGINEER
JUNICHI FURUYAMA

CONTENTS

01. BRAVE DESIGN

Meet Hideaki Iida from Lexus Design Division and learn the story behind the making of the IS.

Pages 4-9

02. IMAGINATIVE TECHNOLOGY

Discover imaginative technology such as Lexus Safety System +.

Pages 10-13

03. EXHILARATING PERFORMANCE

Enjoy exploring a car tuned by a Lexus 'Master Driver'.

Pages 14-19

04. TAKUMI CRAFTSMANSHIP

Learn how Takumi Craftsmen joined the past, present and future when designing the IS.

Pages 20-25

05. SELF-CHARGING HYBRID

Experience how the Lexus Self-Charging Hybrid seamlessly combines petrol and electric power.

Pages 26-29

06. GRADES

Three grades are available; IS, F SPORT and Takumi.

Pages 30-33

07. FEATURES, TECHNOLOGY AND ACCESSORIES

Find out about the amazing level of features and technology available for your IS.

Pages 34-41

08. SPORT PACK AND F SPORT

For a more dynamic driving experience, discover the F SPORT.

Pages 42-43

09. COLOURS AND INTERIOR TRIMS

Select your favourite exterior colour and specify a 'Takumi'-crafted interior that will make you feel at home every time you drive your new IS.

Pages 44-49

10. EQUIPMENT AND TECHNICAL DATA

Study the level of equipment available alongside the key technical data before ordering your IS.

Pages 50-55

11. ADDITIONAL BENEFITS

Discover more about the 3 years' free Lexus Roadside Assistance and learn more about our Hybrid Health Check.

Pages 56-57

12. THE LEXUS EXPERIENCE

Learn how we aim to treat every customer as if they were a guest in our home.

Pages 58-59

01 CALTY Design Research, Newport Beach, California
02 ED², Côte d'Azur, France
03 Lexus Design Centre, Aichi Provence, Japan

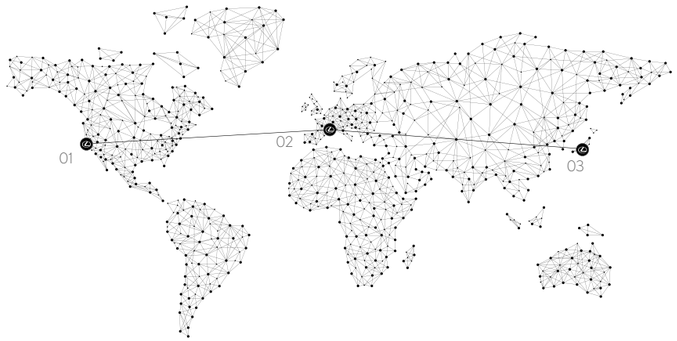

BOLD FROM THE BEGINNING

We've come to Japan with a question. Where (and how) does Lexus design outstanding cars like the bold IS sports saloon? The answer lies in a four storey, glass-fronted building located in Aichi Prefecture in central Japan. Here – and in collaboration with design studios in California and the Côte d'Azur – cars like the Lexus IS are created.

From the outside, the purpose of this building is not immediately apparent. At first glance, it's as anonymous as any other corporate office in the vicinity. Inside the building, teams of Lexus designers, colour specialists and 'Takumi' modellers are busy working on the sports saloon we've come to see. Here they have all the facilities necessary to hone our innovative and award-winning 'L-finesse' (L = Leading edge) design language.

We are met in the modern reception area by Hideaki Iida from the Lexus Design Division, who is responsible for IS exterior design. Before we start our tour, Iida-san explains that the Lexus design hub consists of the following major disciplines: The examination hall on the top floor, with its 200-tonne retractable roof, for viewing new models in daylight; the full-scale theatre and virtual reality cubicle where Lexus can simulate cars and cockpits in different locations, both on the third floor; and the photographic studio on the ground floor. In short, this facility is a 'one-stop shop' for designing a complete new Lexus.

"During the concept phase we explored several very different design routes for the IS. After selecting our favourite with top management, we developed detailed exterior and interior visuals. Almost to the point where we could build a real car based on the final computer-generated images," says Iida-san.

"However, no matter how flawless those computer-generated visuals may be, it is the skilled hands of our 'Takumi' modellers that determine the final treatment of the saloon," adds Iida-san. "Over weeks and months these experienced artisans will sculpt the IS clay model, using just hand tools and their years of experience."

Iida-san leads us through another security door into a vast studio. In the far corner we spy the shape of the saloon we are here to see. Here, in almost complete silence, two expert modellers are carefully applying their masterful strokes to craft a full-sized clay model of the IS. The design will be scrutinised repeatedly until both designers and modellers are satisfied with the final form.

Noticeably proud, Iida-san strokes the full-size clay model: "While keeping its athletic lines and long coupé roofline, we've given the latest IS a more confident look. Design elements include a bold 'signature grille', dominant side 'kick-up' line and jewel-like LED lighting that all combine to create the most distinctive IS ever.

While the exterior gives the impression of a lean athlete, you'll notice other sharp, sleek surfaces. We've aimed to create the classic proportions of a rear-wheel-drive saloon, combined with a strong and firm stance," continues Iida-san. "Notice how the horizontal beltline makes the rear wheels appear larger and visually lowers the centre of gravity. In fact, the entire cabin appears to sit rearward, seemingly applying traction to the rear wheels. Finally, notice how the signature grille projects the individuality that is immediately recognisable as a Lexus."

01

Before we leave the craftsman to their work, Iida-san explains how the modellers themselves have very creative minds and make valuable design suggestions: "This means, the IS is not merely a collection of digital data. It will contain genuine human emotion, inspiration and incredible levels of craftsmanship."

"We've given the IS bolder looks, but also made it more refined for both driver and passengers."

IS CHIEF ENGINEER
JUNICHI FURUYAMA

02

03

01 Side on, the sleek IS body is enhanced by a sculpted 'kick-up' line
02 The low bonnet reduces aerodynamic drag to a minimum
03 To the front, the head-turning Lexus signature grille

View Offers
Build Your IS
Find a Centre
Book a Test Drive
LEXUS

IS Grade | Sonic Sliver Special Metallic Paint

PERFECTED IN ONE OF THE WORLD'S MOST ADVANCED WIND TUNNELS

Proving that beauty is more than skin deep, Lexus designers and engineers spent hundreds of hours perfecting the IS at our aerodynamic facility in Japan. In the wind tunnel, some 22m high, 260m long and capable of creating hurricane force winds, IS Chief Engineer Junichi Furuyama and his team made many minute adjustments to the design:

"At 60mph a car's performance is affected largely by wind resistance. Even driving around the city, aerodynamics effect both fuel efficiency and handling. It might not be the easy way, but this approach has resulted in one of the most refined saloons ever built."

01 10.3" Multimedia Screen
02 Remote Touch
03 15-speaker Mark Levinson® audio

DISPLAYS VIVID IMAGINATION

The IS sports saloon isn't just an amazing car to drive, it's also the perfect place for comfortable longer journeys. Equipped with a large 10.3" multimedia screen, Lexus Premium Navigation guides you effortlessly to your next meeting, while Blind Spot Monitor, Rear Cross Traffic Alert and Road Sign Assist take the stress out of urban driving.

Then, when you've finished work, enjoy your favourite music on the world-class 15-speaker Mark Levinson® Premium Surround system.

*Above features are available on selected grades and packs.

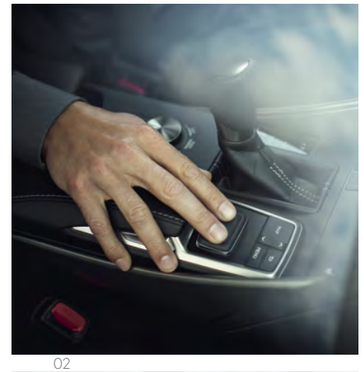

02

01

03

IMAGINATIVE TECHNOLOGY

PREPARED WITH INNOVATION

Wherever you venture in the Lexus IS, it's reassuring to know that you are driving one of the safest cars on the road today. All models are equipped with Lexus Safety System + comprising innovative technologies that help prevent three of the most common accident types: rear-end collisions, lane departures and collisions involving pedestrians.

Driving on busy motorways, or when commuting to and from work, the main dangers are drifting into another lane or not noticing that the traffic ahead has slowed down. For this reason, when you start to change lane, the IS instantly monitors vehicles behind. Or slows down if there is an unexpected hold up ahead.

The IS also features: Road Sign Assist, which gathers information from road signs ahead; Automatic High Beam that senses vehicles ahead at night; and Lane Keep Assist, which is particularly helpful when cornering or driving on motorways.

Driving through busy city centre areas you'll be thankful for the Pre-Collision System. It uses millimetre-wave radar combined with a camera to detect pedestrians appearing suddenly in front. If it senses danger, you are alerted by audible and visual warnings so you can take appropriate measures to avoid an impact. And if you still don't take action, the IS will increase brake pressure to help prevent a collision.

LEXUS SAFETY SYSTEM +

PRE-COLLISION SYSTEM
Pioneered by Lexus, Pre-Collision System (PCS) can help the driver avoid a collision, or lessen the consequences of an impact, even at high speed. PCS uses millimetre-wave radar and a camera mounted on the front of the car that scan the road ahead to detect obstacles or hazards.

DYNAMIC RADAR CRUISE CONTROL
For a more relaxing drive at speeds above 25mph Dynamic Radar Cruise Control (DRCC) uses the Pre-Collision System radar to help the driver maintain a safe distance from the vehicle in front. Should the vehicle in front slow down, so will your IS. Then, as the vehicle in front speeds up, DRCC will automatically and smoothly accelerate your vehicle back to its pre-selected cruising speed.

LANE KEEP ASSIST
Lane Keep Assist (LKA) uses a camera mounted on the windscreen behind the rear-view mirror to track the vehicle's course between lane markings painted on the road surface. If you start drifting out of lane, LKA will activate a warning buzzer and give corrective steering input.

AUTOMATIC HIGH BEAM
At night, Automatic High Beam uses the same camera as Lane Keep Assist to detect oncoming vehicles and automatically dip the high beam headlights. This reduces the chance of accidentally dazzling other drivers and lets you concentrate on the road ahead.

ROAD SIGN ASSIST
Road Sign Assist recognises traffic signs using the windscreen-mounted camera, repeating the information on the multi-information display. This helps prevent the risk of the driver failing to notice important warnings or commands on major routes, including speed limits and lane closures. The system can detect signs that are compliant with the Vienna Convention (including electroluminescent and flashing signs).

01

01 Lexus Self-Charging Hybrid technology helps keep our cities clean

EXPERIENCE A PIONEERING SELF-CHARGING HYBRID

Twenty years ago, Lexus engineers recognised the enormous potential of hybrid's seamless blend of petrol and electric power and began development work. In 2004, we launched the world's first hybrid luxury car. With all larger components engineered in house, Lexus hybrids are an ever-evolving, highly intelligent and flexible drivetrain. Accounting for the vast majority of luxury hybrids on the road today, Lexus offers a wide range of hybrid models and recently delivered the millionth Lexus Self-Charging Hybrid.

Fitted with the Lexus Self-Charging Hybrid technology, the IS offers effortless driving and class-leading environmental performance. Capable of driving short distances in zero emissions EV (Electric Vehicle) mode, it recharges on the move, meaning no 'plugging in' concerns or low battery levels to inhibit your freedom. Together with the unique hybrid ownership experience, you'll enjoy substantial financial savings thanks to lower CO_2 emissions, fuel consumption and running costs – along with tax advantages and high residual values.

02

MASTER OF PERFORMANCE

First came improvements to steering and suspension, where our engineers experimented with lighter and more refined components. After aerodynamic testing at our huge wind tunnel facility in Japan, the IS prototype was handed over to Yoshiaki Ito, a Lexus 'Master Driver' who tunes cars like a virtuoso would a musical instrument. Driving countless laps at Fuji, Suzuka and Autopolis speedways, he did not rest until he'd achieved the perfect balance between road and vehicle. Insufficient traction while cornering? Yoshiaki would pull over and make a slight adjustment, so that when you drive the IS, there will be.

01

02

ENJOY PRECISE HANDLING AND WORLD-CLASS REFINEMENT IN A CAR TUNED BY A LEXUS 'MASTER DRIVER'

01 F SPORT instruments inspired by those on the iconic Lexus LFA supercar
02 Steering responsiveness was perfected by our Lexus 'Master Driver'

View Offers
Build Your IS
Find a Centre
Book a Test Drive

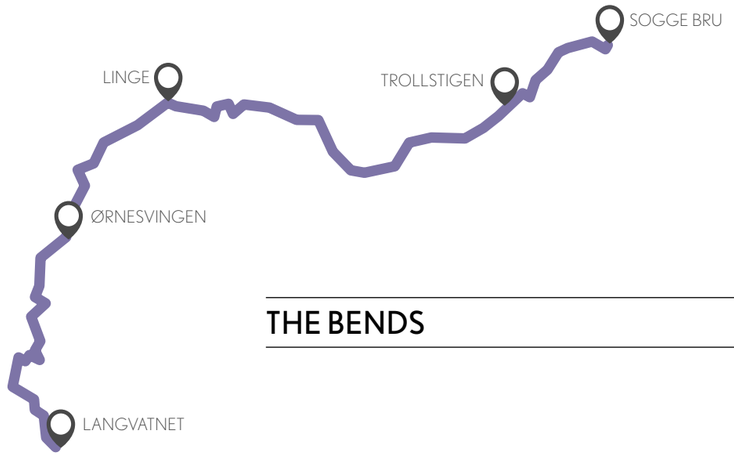

THE BENDS

Trollstigen, a hair-raising section of Norwegian National Road 63, is both a vital local thoroughfare and a popular tourist getaway. Opened in 1936, Trollstigen (Trollstigen translates as The Troll Trail) winds through Norway's Romsdal County, linking grand Lake Langvatnet to the Rauma river-crossing Sogge Bridge, 65 miles away. With a nine per cent incline, the pass' steepest stretch is called Ørnevegen (the Eagle Road) and it consists of 11 hairpin bends.

Shown here approaching a bend, the IS is the first Lexus Self-Charging Hybrid to feature a battery positioned beneath the luggage deck board. This contributes to a sportier driving experience by creating a lower centre of gravity and greater rear body rigidity. Additional benefits include luggage capacity on a par with petrol-engine models, a fuel consumption range of 44.1 - 48.7 mpg and class-leading CO_2 emissions starting from 104g/km.

EXHILARATING PERFORMANCE

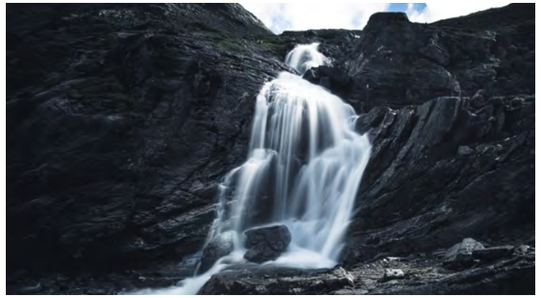

The perfect road to test the IS dynamic handling and razor sharp steering, Ørnevegen is surrounded by mountains - Kongen (the King), Dronningen (the Queen), and Bispen (the Bishop). These peaks offer experienced trekkers a variety of summit hikes.

Lexus owners wishing to enjoy this exhilarating drive should note that the Trollstigen is closed during late autumn and winter when heavy snowfall makes the road pretty much impassable. When it reopens, usually in May, the route is used by around 2,500 drivers daily.

View Offers
Build Your IS
Find a Centre
Book a Test Drive
LEXUS

Takumi Grade | Black Leather Upholstery

MADE IN TAHARA

Welcome to the Tahara automotive plant in Aichi Provence, Japan, birthplace of the Lexus IS. Our guide is Kenji Suzuki, a retired 'Takumi' craftsman, who worked on the very first Lexus back in 1989.

As we make our introductions, I am drawn to his hands. An artist's hands. Amidst all the cutting edge technology we will witness here in one of Japan's most automated automotive plants, it's the human tools that stand out. At 4 million square metres, Tahara is vast. Yet Suzuki welcomes us as he would into a craftsman's atelier. He wants to talk about his colleagues as much as the technology around them. En route to the paint shop we are met by a sea of steel rolls, all waiting in order to be cleaned twice before being stamped into the intricate panels that make up the IS. It's all under the watchful eye of the 'Takumi' on their constant search for imperfection – the scarcely perceptible surface blemish, the most minute tooling defect.

We enter the paint shop to see gleaming paintwork being painstakingly wet sanded by hand to create that perfect finish. Then the mood changes and RGB (Red, Green, Blue) lighting takes over, ensuring the end result is, well, perfection. A word we hear a lot.

The teams in assembly mirror the harmony here between man and machine. While high precision lasers ensure the tightest of tolerances, these are craftsmen who can feel the difference between a 1mm and a 2mm gap. They know what that millimetre means in terms of dashboard vibrations. Meanwhile, their colleagues are lovingly fitting the carefully stitched leather seats and polished door trim that characterise the IS.

Suddenly the background rhythm that has accompanied us on our tour is gone, and we find ourselves in complete silence. While the noise has stopped, the work has not. I look across at Suzuki-san and sense him switching his concentration to sounds. We're in the quiet room, where the 'Takumi' meticulously inspect each IS for smooth running using their highly honed hearing and ultra-sensitive microphones.

We grab a final word with one of the IS test drivers, who get to road test every IS coming off the line. He's sorry he can't show us how taking his hands off the steering wheel at 60mph is part of the test. Another day, perhaps. It's the marriage of technology and craftsmanship that impresses most at Tahara, and our guide embodies it. I want to ask Suzuki how long he has been retired, for he doesn't speak like a retiree. He is embracing the IS with the same intensity he must have shown that first generation model nearly 30 years ago.

FUTURISTIC YET TRADITIONALLY JAPANESE

The Lexus F SPORT possesses many futuristic features – advanced Lexus Self-Charging Hybrid technology, for example, and an impressive suspension system – but it's not just the technology that makes this car special. Look closely inside the cabin and you'll notice trim pieces on the dashboard, centre console and doors that appear modern but exude a strong sense of traditional Japanese craftsmanship. Lexus calls it Naguri-style aluminium. Available on the F SPORT with Takumi Pack.

The word Naguri comes from a millennia-old Japanese wood-shaving technique. To repel bugs, local craftspeople would remove bark from chestnut trees, and onto the bare surface beneath they would carve random, artistic patterns. The practice became a revered art form in the 16th century – Sen No Rikyu, a renowned tea master, took a liking to the finished wood's appearance and used it to decorate his tea rooms. But when the shogun era came to an end in the late 19th century – as the old samurai way of life was gradually replaced by Western practices – Naguri's popularity steadily declined. Now only a handful of wood-carving specialists exist.

Ayumi Kido, executive chief designer of Tecno Art Research Co., a Lexus design hub, recalls how the brand first came to use the technique. "Associates at Yamaha, a close partner of ours, informed us that one of their long-time suppliers had developed a new way of treating aluminium," she says. "They thought it would make for really unique trim pieces for our sportier cars, and when we saw it, we agreed." She continues: "We felt that the Naguri-style finish provided a sense of traditional Japanese art, as well as embracing the spirit of Takumi."

The manufacturing process remains a closely guarded secret. Access to the building in which Naguri materials are made is severely restricted. No one from outside the company is allowed in. "When I visited the supplier, the workers there provided a wonderful tour," Kido says, "but they didn't reveal much about where or how the Naguri-style aluminium was made. They're very secretive about the process."

01

TAKUMI CRAFTSMANSHIP

02

03

04

01 Beautifully finished analogue clock
02 Hand-stitched leatherwork
03 Naguri-Style Aluminium inserts.
Available on the F SPORT with Takumi Pack.
04 Change gear using steering wheel mounted paddle shifters

IS

The IS intelligently combines an advanced 2.5-litre direct-injection petrol engine with a high-output electric motor, while innovative Active Sound Control delivers a sophisticated engine note. The IS is dynamic to drive, yet will only consume an mpg range of 44.1 - 48.7mpg* and emits only 104g/km** of CO_2. In the city, you can select EV (Electric Vehicle) mode, which uses no petrol and creates zero emissions.

* IS combined WLTP range
** Combined Correlated NEDC figure for IS grade.

F SPORT grade with special metallic Azure Blue paint,
18" F SPORT alloy wheels.

01. 2.5-LITRE PETROL ENGINE

Equipped with D-4S direct injection and dual VVT-i valve control, this highly efficient 'Atkinson Cycle' 4-cylinder engine uses Start/Stop technology and exhaust heat recycling to reduce fuel consumption and emissions even further.

02. HYBRID AUTOMATIC TRANSMISSION

No larger than a conventional automatic transmission, Lexus Hybrid Drive's electric motor, generator and power split mechanism are all housed in one highly compact hybrid transmission. Energy flows are managed by an advanced Power Control Unit that constantly optimises the allocation of power – electric, petrol or a combination of both.

03. HYBRID BATTERY

Featuring an innovative design, and located under the boot deck board so as not to encroach on the IS large luggage space, the hybrid battery provides high power output in relation to its weight. The IS recharges its hybrid battery as required – using electricity generated when driving and braking – thus avoiding the need for any external charging.

01/02/03

SELF-CHARGING HYBRID

EXPERIENCE LEXUS HYBRID DRIVE

START UP, DRIVING OFF

When starting off, the electric motor propels the IS up to around 40mph, with electric power being supplied from the hybrid battery. At this point the saloon is almost silent, uses no petrol and produces zero emissions.

NORMAL DRIVING CONDITIONS

At speeds above 40mph the petrol engine cuts in, almost silently, but still receives assistance from the electric motor when required. Through the near-perfect distribution of its dual-power sources, Lexus Hybrid Drive provides exceptional driving comfort – together with lower emissions and fuel consumption.

FULL THROTTLE ACCELERATION

Accelerate powerfully and the electric motor instantaneously supplements the 2.5-litre petrol engine. This delivers a surge of torque to provide smooth, powerful linear acceleration precisely when you need it.

DECELERATION, STOPPING, REGENERATIVE BRAKING

When decelerating or coming to a halt, the petrol engine turns off, cutting emissions to zero. Brake, or take your foot off the accelerator, and regenerative braking harnesses the kinetic energy lost in other cars. It converts this into electrical energy for storage in the hybrid battery, which is why a Lexus Self-Charging Hybrid is always ready to go.

In this brochure we invite you to prepare for the excitement of choosing your new Lexus IS. Showcasing the latest in Lexus design, the IS features a bold Lexus signature grille with stylish smoked chrome details and sporty LED headlights.

The cockpit of the IS is more sophisticated than ever. The large 10.3" multimedia display* is easy to read and intuitive to control via Remote Touch. Ultra-precise leather stitching and finely machined switchgear give the cabin an air of modern elegance and refinement.

All IS models are equipped with the breakthrough Lexus Safety System +. This includes a Pre-Collision System with pedestrian detection; Automatic High Beam for enhanced vision at night; Road Sign Assist that recognises traffic signs and Dynamic Radar Cruise Control

For a more dynamic experience, you can choose the F SPORT featuring an exclusive mesh grille, more responsive suspension, F SPORT interior and distinctive wheels.

*Available on selected grades and packs

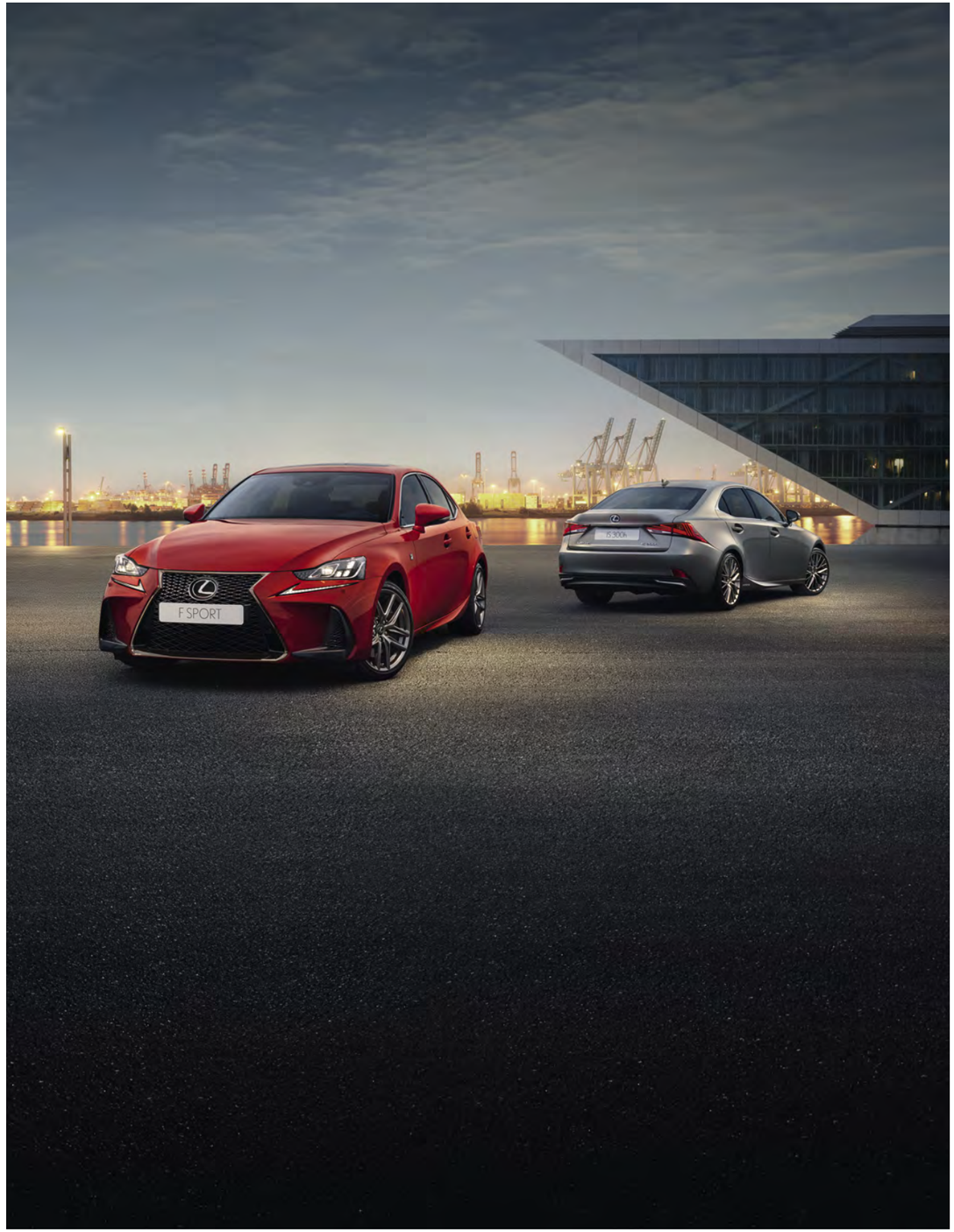

GRADES

There is restricted availability of IS. For the availability of grades, packs, options, colours and trims please check with your Lexus Centre.

IS

The IS grade is distinguished by subtle exterior hallmarks while delivering a high level of refinement.

- 2.5L 223 DIN hp Self Charging Hybrid with Automatic* transmission
- 4 driving models (Eco, EV, Normal, Sport)
- Lexus Safety System +
- 17" alloys wheels
- Bi-LED headlamps with L-shaped day time running lights
- Front and rear parking sensors
- Fabric upholstery with black metal inlay
- 7" Lexus Navigation
- 6-speaker audio including DAB, CD, USB and Bluetooth
- 3-spoke leather steering wheel with paddle shift
- 2-zone air conditioning with S-Flow
- Heated and electrically folding outside mirrors with puddle lights

Options and Packs: (see page 53)

- Comfort Pack
- Sport Pack
- Premium Pack
- Sunroof (with Comfort Pack, Sport Pack and Premium Pack)

Electronic-CVT

F SPORT

Displaying dynamic saloon looks, the F SPORT grade offers features such as an exclusive signature grille, F SPORT wheels and sporty interior details.

In addition to IS grade:

- F SPORT tuned suspension
- F SPORT signature grille
- F SPORT bumpers
- F SPORT badging
- 18" alloy wheels F SPORT design
- Rain-sensing wipers and auto headlights
- F SPORT seats with fabric Tahara** upholstery with wedge metal inlay
- Driver and passenger 8-way electrically adjustable seats
- Driver 2-way lumbar support
- F SPORT meters, steering wheel and gearshift lever
- F SPORT aluminium sports pedals and scuff plates
- Auto-Dimming Rear View mirror

Options and Packs: (see page 53)

- Premium Pack
- Takumi Pack
- Sunroof (with Premium Pack and standard with Takumi Pack)

**Man-Made Leather

TAKUMI

The ultimate IS for looks, refinement and comfort.

In addition to IS grade:

- 18" alloy wheels
- 3-eye LED headlamps
- Blind Spot Monitor system with Rear Cross Traffic Alert (RCTA)
- Reversing camera with back guide lines
- Smart keyless entry
- Sunroof
- Smooth leather upholstery with laser cut wood inlay
- 8-way power front seats including driver lumbar support and memory
- Ventilated front seats and heated steering wheel
- 10.3" Lexus Premium Navigation with Panoramic View Monitor
- 15-speaker Mark Levinson Premium Sound System
- Front aluminium scuff plates

01

02

03

04

01. 17" ALLOY WHEELS

Select 5-twin-spoke 17-inch wheels, with 225/45 R17 tyres. A bright machined finish adds extra flair to the IS. Standard on IS grade.

02. 18" ALLOY WHEELS

Multi-spoke design wheels with 225/40 (front) and 255/35 (rear) R18 tyres. Available on the IS grade with the Premium Pack and standard on the Takumi grade.

03. BI-LED HEADLIGHTS

Standard on the IS and F SPORT grades, LED headlights use the same light source for both high and low beam. They come with distinctive Lexus-signature L-shaped Daytime Running Lights.

04. 3-EYE LED HEADLIGHTS

Sophisticated 'L'-shaped headlights. For an unmistakable look, they are underscored by Lexus-signature LED Daytime Running Lights. Available on the IS grade with the Premium Pack and F SPORT grade with the Premium Pack and Takumi Pack. Standard on the Takumi grade.

05. LED REAR LIGHTS

Triple layer 'L'-shaped LEDs create crystal-like illumination that displays both beauty and sharp visibility to following vehicles.

06. BOLD LEXUS SIGNATURE GRILLE

The IS models feature a more dynamic Lexus signature grille that enhances the saloon's sporty feel with a visually lower centre of gravity, while blending effortlessly into the bonnet.

07. SUNROOF

For a light and airy cabin, the IS can be equipped with an electric tilt and slide sunroof. Available on the IS grade as an option with the Comfort Pack, Sport Pack and Premium Pack. Also available on the F SPORT grade as an option with the Premium Pack. Standard with the Takumi Pack and Takumi grade.

05

06

07

View Offers
Build Your IS
Find a Centre
Book a Test Drive
LEXUS

01

02

03

04

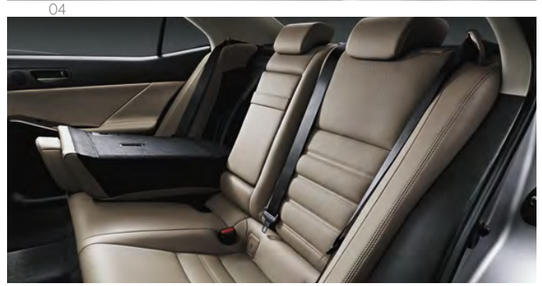

05

06

07

01. DRIVING COMFORT

The IS showcases a spacious interior, rich in the refinement and quality for which Lexus is legendary. The driving position is sporty and focused, while front seats offer extra lateral support when cornering.

02. TOUCH-SENSITIVE CONTROLS

Electrostatic controls let you adjust the temperature in the IS saloon using a sweep of your fingertip.

03. LASER CUT WOOD INLAY

Innovative laser technology is used to engrave the wooden trim on the IS. Exposing a layer of aluminium for an exquisite lined effect, these inserts are manufactured exclusively by the craftspeople at Yamaha's piano division. Standard on Takumi grade.

04. S-FLOW CLIMATE CONTROL

Powerful, dual-zone air conditioning is also highly energy efficient, thanks to S-Flow technology which intelligently provides climate control only to those seats which are occupied.

05. 60:40 FLEXIBILITY

A practical 60:40 split folding rear seat comes standard on all IS models, which allows easy stowage of larger items.

06. REAR SEATS LOWERED

Offering extra convenience, but with the grace and refinement of a saloon, when all rear seats are folded down there's room to carry bulkier objects.

07. LUGGAGE SPACE

Compact rear suspension results in excellent luggage space, enough for three sets of golf clubs and two small sports bags, or four medium sized suitcases.

01. LEXUS MEDIA DISPLAY

The IS comes standard with Lexus Media Display, which features a 7" screen and a rotary dial to adjust audio, climate settings or view the energy monitor. Compatible smartphones can be 'mirror linked' to the display.

02. 6- OR 10-SPEAKER PIONEER® AUDIO

A 6-speaker Pioneer® audio system with DAB tuner is fitted as standard. This features an AM/ FM RDS tuner, CD player and Bluetooth® connectivity. The 10-speaker upgrade has a DVD player and offers greater fidelity. Available on the IS grade with the Premium Pack and F SPORT grade with the Premium Pack. Standard with the Takumi Pack and on the Takumi grade.

03. 15-SPEAKER MARK LEVINSON®

The IS can be ordered with a peerless Mark Levinson® Premium Surround system that delivers a true live concert experience when listening to music or watching a DVD. Fifteen bespoke speakers, each individually tuned, produce incredible 5.1-channel digital surround sound. Innovative GreenEdge™ technology in each speaker means twice the sound for the same energy consumption, while an 'Auto Volume System' lets you enjoy music to the full. Available on the F SPORT grade with the Takumi Pack and standard on the Takumi grade.

04. MULTI-INFORMATION DISPLAY

Positioned between the two main dials, the 4.2" high-resolution display provides a wide range of vehicle information and data. For instance, navigation directions, or when your smartphone is connected, the name, photograph and phone number of the person calling you.

05. 10.3" MULTIMEDIA DISPLAY

Perfectly positioned for a relaxing drive, this large 10.3" high resolution display can be operated by Voice Command or Remote Touch. Its split-screen capability allows you to simultaneously access information, such as Lexus Premium Navigation and climate data. Available on the IS grade with the Premium Pack and F SPORT grade with the Premium Pack and Takumi Pack. Standard on the Takumi grade.

06. LEXUS PREMIUM NAVIGATION

Features vivid 3D graphics, points-of-interest and many mapping options like the most eco-friendly route. Once parked, the system will even generate a QR code for your smartphone, with directions by foot to your final destination. Available on the IS grade with the Premium Pack and F SPORT grade with the Premium Pack and Takumi Pack. Standard on the Takumi grade.

07. REMOTE TOUCH

Next-generation Remote Touch, with single press confirmation, lets users interact intuitively with the central multimedia display. Ergonomically designed, Remote Touch is close at hand and as easy to use as a computer mouse.

01

02

03

04

05

06

07

View Offers
Build Your IS
Find a Centre
Book a Test Drive
LEXUS

01

02

03

04

05

01. EIGHT AIRBAGS

In addition to an immensely strong passenger safety cell, occupant security is provided by eight airbags. The driver and front passenger are protected by 2-stage head airbags, as well as knee and side airbags. Curtain shield airbags run the full length of both cabin sides. All seatbelts, except for the centre rear seat, are also specified with pre-tensioners. This exceptional level of safety is standard on every IS.

02. REVERSING CAMERA

Engage reverse and the view behind the car is relayed to the standard 7" display, or optional 10.3" multimedia display, with on-screen guides to assist parking. Available on the IS grade with the Comfort Pack, Sport Pack and Premium Pack. Also available on the F SPORT grade with the Premium Pack and Takumi Pack and standard on the Takumi grade.

03. POP-UP HOOD

The IS features an impact-absorbing pop-up hood. Activated by sensors mounted in the front bumper, should you collide with a pedestrian, the system slightly raises the level of the bonnet to give more space between it and the hard components of the engine underneath. This reduces the risk of injuries to the pedestrian.

04. BLIND SPOT MONITOR

Radar devices mounted in the rear bumper detect vehicles in adjacent lanes that are not visible in the door mirrors. If the driver is indicating to change lane and a vehicle enters the blind spot, the Blind Spot Monitor instantly activates a warning signal in the relevant door mirror. Available on the F SPORT grade with the Takumi Pack and standard on the Takumi grade.

05. REAR CROSS TRAFFIC ALERT

When reversing, for instance in a busy car park, Rear Cross Traffic Alert (RCTA) uses Blind Spot Monitor radar to identify vehicles approaching the difficult-to-see area behind the IS. When a vehicle is detected, the RCTA function alerts you with a visual display in the door mirrors and a buzzer. Available on the F SPORT grade with the Takumi Pack and standard on the Takumi grade.

01. LEXUS SAFETY SYSTEM +

The IS comes standard with our breakthrough Lexus Safety System + that combines Pre-Collision System, Dynamic Radar Cruise Control, Lane Keep Assist, Road Sign Assist and Automatic High Beam in one powerful package.

02. PRE-COLLISION SYSTEM & PEDESTRIAN DETECTION

Millimetre-wave radar and an on-board computer calculate collision risk ahead. If the risk is high, the driver is alerted by audible and visual warnings and brake pressure is increased. When a collision is deemed unavoidable, the brakes will be applied automatically as necessary and the front seatbelts tightened. As part of the Pre-Collision System, if an object (such as a pedestrian) is detected in front of the IS, automatic braking will activate when the car is travelling between about 18-48mph to help avoid a collision.

03. ROAD SIGN ASSIST

The Road Sign Assist system on the IS recognises traffic signs using the windscreen mounted camera and provides information to the driver in the multi-information display. RSA can detect signs that are compliant with the Vienna Convention (including electroluminescent and flashing signs).

04. DYNAMIC RADAR CRUISE CONTROL

For a more relaxing drive, Dynamic Radar Cruise Control maintains a set distance between the IS and the vehicle ahead, even if that vehicle varies its speed.

05. LANE KEEP ASSIST AUTOMATIC HIGH BEAM

A camera mounted behind the rear-view mirror enables Lane Keep Assist to warn you if you inadvertently drift out of lane.

At night, Automatic High Beam uses the same camera to automatically switch to low beam when it detects the lights of either an oncoming or preceding vehicle. This reduces the chance of accidentally dazzling other drivers should you forget to switch off the high beam headlights.

Under no circumstances should Lexus Safety System + be used to replace your driving skills at the wheel. Please read the instructions very carefully before operating the system and remember the driver is always responsible for safety. Details of specifications and equipment are subject to change to suit local conditions and requirements. Please enquire at your local Lexus Authorised Retailer.

01

02

03

04

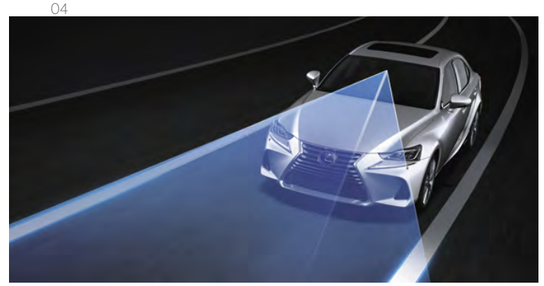

05

View Offers
Build Your IS
Find a Centre
Book a Test Drive

01

02

03

04

01. STRONG CHASSIS, SOPHISTICATED SUSPENSION

The foundation of the IS saloon's agility and excellent road-holding is its strong body. Sophisticated manufacturing processes increase rigidity, including bodywork adhesives, laser-screw welding and extra spot welding. Double wishbone front suspension and a multi-link rear suspension enhance straight-line performance and cornering grip.

02. ADVANCED AERODYNAMICS

The IS has superb aerodynamics, thanks to details like a near-flat underbody and tiny winglets on the front door pillars and rear lights. First seen on F1 racing cars, these winglets create air vortices that help pull the airstreams inwards to improve the way the IS cuts through the air. This not only enhances stability and handling, but also improves fuel efficiency and reduces wind noise.

03. DRIVE MODE SELECT

Vehicle performance can be fine-tuned using Drive Mode Select. ECO mode reduces emissions and conserves fuel while, for everyday driving, NORMAL provides an ideal balance of power, economy and ride comfort. For increased drivetrain responsiveness, simply switch to SPORT S mode. The SPORT S+ mode adjusts suspension, steering and throttle response, making for a sportier driving experience. SPORT S+ mode is available on the F SPORT grade with the Takumi Pack.

04. ADAPTIVE VARIABLE SUSPENSION

For a more engaging drive, the damping force at all four wheels is intelligently controlled by the Adaptive Variable Suspension in response to road surface conditions and driver input. This not only improves ride comfort, but also increases handling stability – especially during higher-speed cornering. Available on the F SPORT grade with the Takumi Pack.

01. FRONT AND REAR DASH CAMS

Full HD 1080p front and rear dash cams to record the road in front and behind you, giving you a peace of mind when driving.

02. ROOF RACK

The lockable lightweight aluminium roof rack is aerodynamically shaped to reduce wind noise. Easy to install and remove, it forms a strong base for the range of optional carrying attachments.

03. ROOF-TOP BICYCLE HOLDER

For use with the Lexus roof rack. The lockable lightweight design has special grips to secure the bicycle wheels and frame. Conveniently, the frame grip can be adjusted at roof height.

04. FRONT AND REAR MUDFLAPS

The set of front and rear mudflaps help to stop mud and stones from splashing and chipping onto your vehicle, keep your vehicle looking fresh.

05. ILLUMINATED SCUFF PLATES

Lexus scuff plates add a stylish design feature while also protecting the door sill paintwork. Their brushed aluminium finish is highlighted by subtle logo illumination.

06. BOOT LINER

Made of tough, flexible plastic with a non-slip surface pattern and a raised lip around the edges to protect the luggage space carpet against mud, dirt, sand and liquids.

07. REAR BUMPER PROTECTION PLATE

Designed to protect the rear bumper paintwork against scratching when loading or unloading the boot, this accessory will keep your IS in perfect condition for many years to come.

08. TOWING HITCH

Redistributes the pulling and braking forces of towing to minimise stress on the vehicle. The IS can tow up to 750kg, with a hook that can be removed when not in use. Buffers in the wiring kit shield your car's electrics against faults in the trailer system.

09. RUBBER FLOORMATS

Keep your vehicle floor space clear from dirty stains and sands whether it be a rainy day, or after a walk along the beach.

01 02

03 04

05 06

07 08

09

01

02

03

04

01. BLACK LEXUS SIGNATURE GRILLE

For a striking face, the IS Sport Pack model features an extra dark Lexus signature grille.

02. 18" ALLOY WHEELS

Black chrome finish 5-spoke alloy wheels create an unmistakable look of sports sophistication.

03. BLACK DOOR MIRRORS

Factory fitted black door mirrors underline the dynamic stance of the IS Sport Pack.

04. EXCLUSIVE INTERIOR / SPORTS EQUIPMENT

Inside the IS Sport Pack, everything you touch displays peerless Lexus quality – from the leather covered steering wheel to the exclusive black and sandstone fabric Tahara** upholstery with contrast stitching.

The IS Sport Pack is available on the IS grade and in conjunction with no other packs.
Please refer to page 53 for full specification details

**Man-Made Leather

01. F SPORT DESIGN

F SPORT models are unmistakably dynamic, with an exclusive Lexus signature grille featuring an F SPORT mesh pattern. The lower front spoiler features front brake cooling ducts, aerodynamic fins for increased downforce, and a larger lower grille opening.

02. F SPORT WHEELS / SUSPENSION

These 18-inch alloy wheels feature a twin-spoke design inspired by the Lexus LFA. Both the front and rear suspension and Electric Power Steering are exclusively tuned for the F SPORT, to enhance handling performance without compromising ride quality.

03. F SPORT BADGE

Although discreet, the F SPORT logo is a badge of distinction. The 'F' refers to the birthplace and primary testing site of our high-performance cars: Fuji Speedway, located near Mount Fuji.

04. SPORTS SEATS

F SPORT seats make use of 'integrated foaming' technology. This motorsport-inspired production process allows a more detailed seat profile, and better fit than is possible with conventional upholstery methods. Exclusive F SPORT leather seats are available on the F SPORT grade with the Premium Pack and Takumi Pack.

05. F SPORT STEERING WHEEL

Featuring the F SPORT logo, you'll sense a special kind of connectedness every time you take this wheel in your hands. Finished in perforated leather, the F SPORT gearshift design matches the steering wheel to create an exciting sports ambiance.

06. F SPORT INSTRUMENTS

This stunning single meter has innovative Thin Film Transistor technology and a moving centre ring design inherited from the LFA supercar. When operating the multimedia system, the meter ring slides to one side to reveal the menu.

07. DRILLED SPORT PEDALS

Offering excellent grip characteristics, drilled aluminium pedals reflect the motorsport design heritage of the F SPORT models.

01

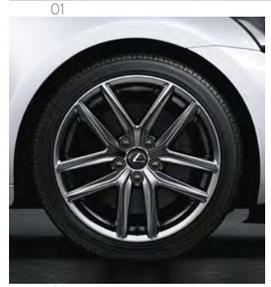

02

03

04

05

06

07

DEVELOPING A NEW LEXUS PAINT COLOUR TAKES A SMALL ARMY OF EXPERTS

Lexus designers never use off-the-shelf colours, preferring instead to develop their own, from scratch, a process that can take up to two years. The Lexus paint palette totals some 30 different colours including special metallic finishes like Sonic Silver and Sonic Titanium.

There are no shortcuts to creating a new Lexus colour: A designer's decision comes only after going through hundreds of samples. "When developing a new colour I see so many shades of paint that I sometimes can't see straight at the end of the day," says Megumi Suzuki, one of our most experienced colour designers. To do her job, it takes a grasp of chromogenics and a keen eye.

"Every time I meet someone or walk into a shop or go to someone's house, I check out colours and materials," she says. "There are a lot of people like me in our division."

Even after a colour has been decided upon, there's plenty to do. At various stages during development, Suzuki had to enlist a small army of experts: lab technicians who mix the paint, clay sculptors, engineers and the assembly-line paint shop crew who would give each car a flawless, uniform coat. Every few weeks Kansai Paint (a Lexus paint supplier) produces a new batch, and Lexus designers give the samples a thorough look-over, bending the test panels to mimic the contours of a car. All are scrutinised indoors and outdoors, under floodlights, in sunlight, shade and overcast conditions, and at different times of the day and months of the year.

Selecting the final colour is not easy. a colour that is dazzling on a summer morning can appear sickly in the shade or under showroom lights. Designers also have to contend with the vagaries of their own preferences. "The odd thing about colour is that your perception of it can change depending on the season, how you feel that day and the trends you're seeing," says Suzuki.

There is restricted availability of IS. For the availability of grades, packs, options, colours and trims please check with your Lexus Centre.

SOLID COLOURS

FUJI RED | 3T2

VELVET BLACK | 212

METALLIC COLOURS

F SPORT WHITE | 083[1]

MERCURY GREY | 1H9

GRAPHITE BLACK | 223

MESA RED | 3R1

DEEP BLUE | 8X5[2]

SPECIAL METALLIC COLOURS

SONIC WHITE | 085[2]

SONIC SILVER | 1J2

SONIC TITANIUM | 1J7

AZURE BLUE | 8X1[1]

[1] Exclusive to F SPORT.
[2] Not available on F SPORT.

Please note: due to printing variances, actual paintwork colours may vary slightly from those illustrated.

There is restricted availability of IS. For the availability of grades, packs, options, colours and trims please check with your Lexus Centre.

IS

FABRIC TAHARA** TRIM

Black

Black & Sandstone
(with Sport Pack only)

INLAYS

Black Metal

TAHARA** TRIM (with Comfort Pack)

Black

INLAYS

Black Metal

LEATHER (with Premium Pack)

Black

Sandstone

Noble Brown

INLAYS

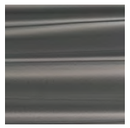

Warm Metal

F SPORT

F SPORT FABRIC TAHARA** TRIM

Black

Dark Rose*

F SPORT INLAYS

Wedge Metal

F SPORT LEATHER (with Premium and Takumi Packs)

Black

Dark Rose*

F SPORT INLAYS

Wedge Metal

Naguri-Style
Aluminium
(with Takumi Pack)

TAKUMI

LEATHER

Black

Sandstone

Noble Brown

Laser Cut Wood

* Not available in combination with Fuji Red (3T2) or Mesa Red (3R1) exterior colours

**Man-Made Leather

01

02

03

01 Black fabric Tahara trim with Black Metal inlays (IS grade and Comfort Pack)
02 Black and Sandstone fabric Tahara trim with Black Metal inlays (Sport Pack)
03 Black fabric Tahara trim with Wedge Metal inlays (F SPORT)

04

05

06

04 Dark Rose leather with Naguri-Style Aluminium inlays (F SPORT with Takumi Pack)
05 Black leather with Naguri-Style Aluminium inlays (F SPORT with Takumi Pack)
06 Black Leather with Warm Metal inlays (IS with Premium Pack)

07

08

07 Sandstone leather with Warm Metal inlays (IS with Premium Pack)
08 Noble Brown leather with Laser Cut Wood inlays (Takumi)

There is restricted availability of IS. For the availability of grades, packs, options, colours and trims please check with your Lexus Centre.

EXTERIOR	**IS**	**F SPORT**	**TAKUMI**
Heated and electrically folding outside mirrors with turn indicators and puddle light	■	■	–
Heated, auto-dimming, auto-folding outside mirrors with reverse tilt function, turn indicators and puddle light	–	□[3,4]	■
Front and rear electric windows equipped with jam protection	■	■	■
Rain-sensing wipers	□[2,3]	■	–
Lane change flasher function	■	■	■
Parking sensors, 4 x front and 4 x rear	■	■	■
Sport exterior styling consisting of: Black spindle grille Black mirror covers Black wheels Black rear lower bumper	□[2]	–	–
F SPORT exterior styling consisting of: Spindle front grille Front bumper Exterior badging	–	■	–
WHEELS			
17" alloy wheels (225/45 R17)	■	–	–
Black 18" alloy wheels (Front 225/40 R18, Rear 255/35 R18)	□[2]	–	–
18" F SPORT alloy wheels (Front 225/40 R18, Rear 255/35 R18)	–	■	–
18" alloy wheels (Front 225/40 R18, Rear 255/35 R18)	□[3]	–	■
ACTIVE SAFETY AND DRIVING DYNAMICS			
VDIM (Vehicle Dynamics Integrated Management)	■	■	■
ABS (Anti-lock Braking System)	■	■	■
BAS (Brake Assist System)	■	■	■
TRC (Traction Control)	■	■	■
EBD (Electronic Brake force Distribution)	■	■	■
VSC (Vehicle Stability Control)	■	■	■
ECB (Electronically Controlled Brake system)	■	■	■
EPS (Electric Power Steering), speed sensitive	■	■	■
Hill Assist Control	■	■	■
Lexus Safety System+ consisting of: Dynamic Radar Cruise Control Pre-Collision System Lane Keep Assist Road Sign Assist Automatic High Beam	■	■	■
Blind Spot Monitor system with RCTA (Rear Cross Traffic Alert)	–	□[4]	■
4 driving modes: Normal, Eco, Sport & EV	■	■	■
Sports suspension	–	■	–
Adaptive Variable Suspension (AVS)	–	□[4]	–
E-CVT with 6 stage sequential shift & kick down switch	■	■	■
Active Sound Control	■	■	■
Tyre Pressure Warning System	■	■	■
Body adhesive, laser screw welding & laser brazed roof structure	■	■	■

■ Available as standard.
○ Available as an option.
□ Available as part of a pack.
– Not available.

□[1] Comfort Pack
□[2] Sport Pack
□[3] Premium Pack
□[4] Takumi Pack

There is restricted availability of IS. For the availability of grades, packs, options, colours and trims please check with your Lexus Centre.

PASSIVE SAFETY	**IS**	**F SPORT**	**TAKUMI**
Driver and front passenger 2-stage airbags	■	■	■
Driver and front passenger side airbags	■	■	■
Driver and front passenger knee airbags	■	■	■
Curtain shield airbags (front and rear)	■	■	■
Passenger airbag cut-off switch	■	■	■
Front seat belt with pre-tensioners: 3-point ELR (Emergency Locking Retractor)	■	■	■
2 x ISOFIX child rear seat restraints	■	■	■
Pop-Up Hood	■	■	■
SECURITY			
Anti-theft system: siren, intrusion sensor, tilt sensor and engine immobiliser	■	■	■
Two-motion door lock: double lock	■	■	■
Window etching	■	■	■
Locking wheel nuts (Thatcham approved)	■	■	■
AUDIO, COMMUNICATION AND INFORMATION			
DAB radio	■	■	■
Lexus media display with 6 speakers, 7" display screen, 1-CD and rotary dial controller	■	■	–
Lexus Navigation with full European map capability	■	■	–
Reversing camera	□[2,3]	□[3,4]	■
Lexus Premium Navigation: 10 speakers Full European map 10.3" display screen Connected services 1-CD/DVD Street view Reversing Camera with back guide lines Sharks fin antenna Remote touch controller Electrically adjustable steering column	□[3]	□[3,4]	■
Mark Levinson® Premium Surround sound system with 15 speakers	–	□[4]	■
2 USB sockets	■	■	■
1 AUX socket	■	■	■
Bluetooth® mobile phone connectivity	■	■	■

□[1] Comfort Pack
□[2] Sport Pack
□[3] Premium Pack
□[4] Takumi Pack

There is restricted availability of IS. For the availability of grades, packs, options, colours and trims please check with your Lexus Centre.

INTERIOR COMFORT AND CONVENIENCE	IS	F SPORT	TAKUMI
Push button start	■	■	■
Smart Entry	□[1,2,3]	□[3,4]	■
Dual-zone climate control air conditioning system with S flow and electrostatic temperature control switch	■	■	■
Auto-dimming interior rear-view mirror	□[1,2,3]	■	■
Manually adjustable steering column with lock protect	■	■	–
Electrically adjustable steering column with lock protect	–	□[3,4]	■
3-spoke leather steering wheel with paddle shift	■	–	■
3-spoke leather and heated steering wheel with paddle shift	□[3]	□[3,4]	■
F SPORT leather steering wheel with paddle shift	–	■	–
Leather gear lever	■	–	■
F SPORT leather gear lever	–	■	–
LFA style instrument meters	–	■	–
Black scuff plates	■	–	–
Front aluminium scuff plates and rear black scuff plates	–	–	■
F SPORT front aluminium scuff plates and rear black scuff plates	–	■	–
F SPORT aluminium sports pedals	–	■	–
Black metal inlay	■	–	–
Warm metal inlay	□[3]	–	–
Wedge metal inlay	–	■	–
Naguri-style aluminium inlay	–	□[4]	–
Laser cut dark wood inlay	–	–	■
Analogue clock	■	■	■
Console knee pad	■	■	■
Front and rear interior LED lighting	■	■	■
4 x tie down hooks in the boot	■	■	■
2 x coat hooks in the rear	■	■	■
2 x sun visors with vanity mirror and lamp	■	■	■
Textile carpet mats	■	■	■

■ Available as standard.
○ Available as an option.
□ Available as part of a pack.
– Not available.

□[1] Comfort Pack
□[2] Sport Pack
□[3] Premium Pack
□[4] Takumi Pack

There is restricted availability of IS. For the availability of grades, packs, options, colours and trims please check with your Lexus Centre.

PACKS	IS	F SPORT	TAKUMI
Comfort Pack:	○	–	–
Tahara** upholstery Smart Keyless Entry Rain-sensing wiper Reversing Camera Auto-Dimming Rear View Mirror			
Sport Pack:	○	–	–
Fabric Tahara** upholstery Smart Keyless Entry Rain-sensing wiper Reversing Camera 18" Black alloy wheels Sport exterior styling Auto-Dimming Rear View Mirror			
Premium Pack:	○	○	■
Leather upholstery Ventilated front seats Heated steering wheel 8-way electrically adjustable front seats with driver lumbar support Memory function for driver's seat (F SPORT only) 10.3" Lexus Premium Navigation with Remote Touch 10-speaker Pioneer Audio with DVD player Smart Keyless Entry Rain-sensing wipers (standard on F SPORT) Auto-dimming rear view mirror (standard on F SPORT) Auto-dimming and auto-folding outside mirrors with reverse tilt function (F SPORT only) Electrically adjustable steering column (F SPORT only) Reversing Camera 18" alloy wheels (standard on F SPORT) 3-Eye LED headlamps			
Takumi Pack:	–	○	–
Leather upholstery with Naguri-style aluminium inlay Ventilated front seats Heated steering wheel 8-way electrically adjustable front seats including drivers seat lumbar support and memory function Electrically adjustable steering column Auto-dimming and auto-folding outside mirrors with reverse tilt function 10.3" Lexus Premium Navigation with Remote Touch 15 Speaker Mark Levinson Premium Sound System with DVD player Smart Keyless Entry Reversing Camera 3-Eye LED headlamps Blind Spot Monitor system with RCTA (Rear Cross Traffic Alert) Adaptive Variable Suspension with SPORT S+ Drive Mode Sunroof			
Sunroof (in combination with Comfort Pack, Sport Pack and Premium Pack)	○	○	■
17" Alloy Wheels (available as an option with IS Premium Pack')	○	–	–

**Man-Made Leather

ENGINE	IS 300h
Capacity (cm^3)	2,494
Cylinders / Valves	L4 / 16
Maximum power (DIN hp @ rpm)	181 @ 6,000
Maximum power (kW @ rpm)	133 @ 6,000
Maximum torque (Nm @ rpm)	221 @ 4,200 - 5,400
ELECTRIC MOTOR	
Type	AC synchronous, permanent magnet
Maximum power (DIN hp)	143
Maximum power (kW)	105
Maximum torque (Nm)	300
TRANSMISSION	
Type	Hybrid with Automatic Transmission- E-CVT
Drive	Rear-Wheel Drive
TOTAL SYSTEM OUTPUT	
Total power (DIN hp)	223
Total power (kW)	164
PERFORMANCE	
Maximum speed (mph)	125
Acceleration 0-62 mph	8.4
FUEL CONSUMPTION* WLTP	
Combined mpg (l/100km)	44.1 (6.4) - 48.7 (5.8)
CO_2 EMISSIONS* 17"/17"#/18"	
Urban (g/km)	113 / 115 /115
Extra urban (g/km)	97 / 104 / 104
Combined (g/km)	104 / 109 / 109
EMISSION STANDARD	
Euro Class	Euro 6d-TEMP
WEIGHTS (kg)	
Gross vehicle	2,145
Kerb (min. - max.)	1,620 - 1,720
CAPACITIES**	
Luggage volume (l)	450
Fuel tank capacity (l)	66
Towing capacity max. unbraked (kg)	750
Towing capacity max. braked (kg)	750

17" Alloys without towing. IS grade only

†Figures are provided for comparability purposes; only compare fuel consumption and CO_2 figures with other cars tested to the same technical procedures. These figures may not reflect real life driving results.
All vehicles are certified according to the World Harmonised Light Vehicle Test Procedure (WLTP). CO_2 figures (and hence car tax and recommended 'on the road' prices) may differ from information printed before 1 April 2020, due to a change in the official method of calculation. This date may change, please visit wwwvehicle-certification-agency.gov.uk/lcb/wltp.asp for the latest information.
For details of your preferred model and grade derivative, please contact your local Lexus Centre. Choice of options and accessories fitted (pre-registration) may affect the official CO_2 figures, car tax and 'on the road' price.
Please note: further Technical Data, including any updates, can be found at **www.lexus.co.uk**

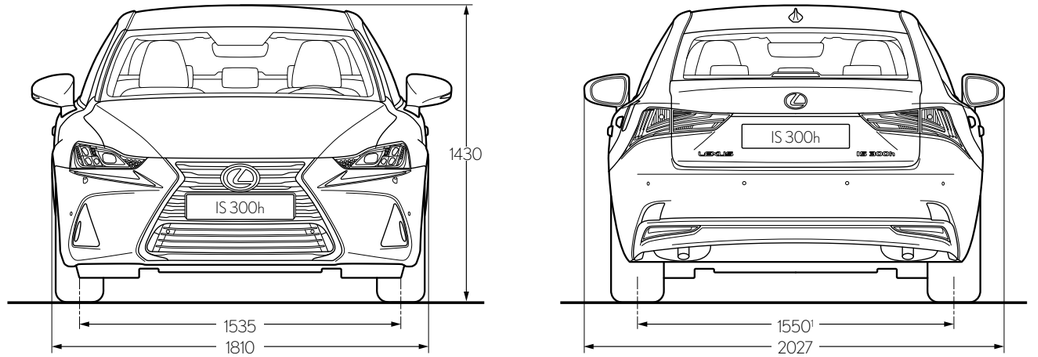

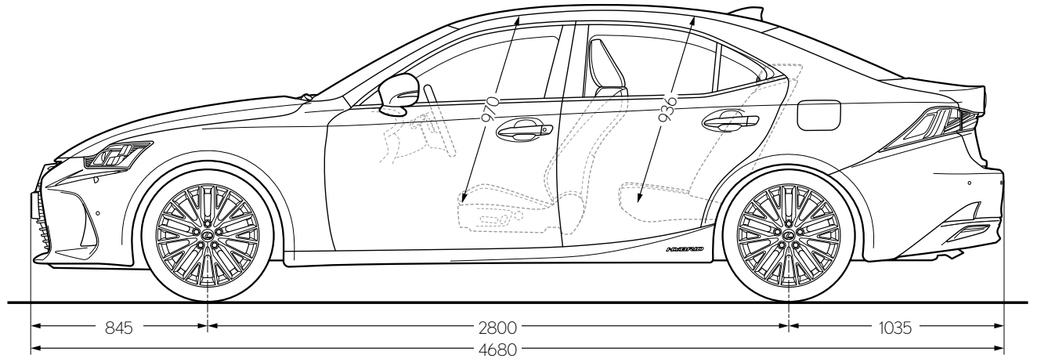

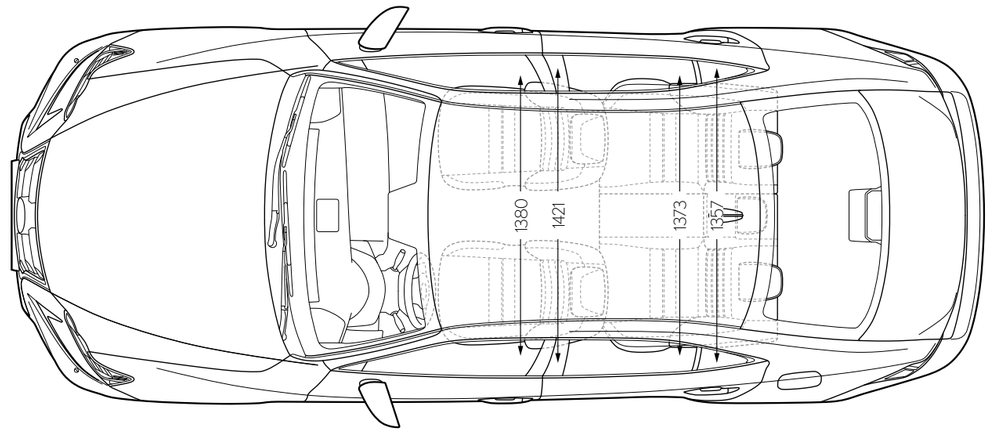

Please note: the dimensions illustrated / noted are measured in millimetres.

† Figure quoted is for the IS specified with 17" alloy wheels. When specified with 18" alloy wheels, the figure is 1,540.

LEXUS ROADSIDE ASSISTANCE

Whatever the situation, when you're driving your Lexus, we're just one call away with expert support at the roadside 24 hours a day, every day of the year.

3 years from initial purchase of new vehicle 24 hours a day, 365 days a year assistance anywhere in the UK.

Home Start
- One in four breakdowns happen at the home address. Home Start allows you to enjoy all the benefits of Lexus Roadside Assistance from your home address.

Personal assistance
- Lexus Roadside Assistance is designed to look after you - not just your vehicle. So even if you are a passenger in someone else's car you can still receive Lexus Roadside Assistance.

Replacement vehicle
- A replacement vehicle will be provided free of charge (excluding petrol and other consumables) for up to three days, provided we have taken your vehicle to a Lexus Centre for repairs following a breakdown.

Hotel accommodation
- If a replacement vehicle is unavailable, we will arrange a hotel for you and your family for up to £150 per person to a maximum of £500, for one night.

Onward travel
- If a replacement vehicle is unavailable and you would like to make your own travel arrangements following a breakdown, we will reimburse the cost of this up to £150 per person, to a maximum of £500.

European travel
- If you travel across Europe your Roadside Assistance will travel with you, whether you are driving your Lexus or another car.

Medical assistance
- If the driver of the car is certified ill, we will take you and your passengers to any single destination in the UK.

Lost or broken keys
- If you lose or break your keys, Lexus Roadside Assistance will arrange for recovery of your vehicle to a local Lexus Centre. You will be responsible, however, for the cost of replacement keys.

HYBRID BATTERY WARRANTY COVER AND HYBRID HEALTH CHECK (HHC)

A Hybrid Health Check is included in all services for hybrid vehicles, where a technician will test the entire hybrid system and provide a written report.

With each Hybrid Health Check, the customer will receive an extra 1 year or 10,000 mile (whichever comes sooner) hybrid battery warranty extension, until the vehicle is 15 years old.

An annual Hybrid Health check is free of charge as part of any Lexus Service. If a service isn't due for a while, a standalone Hybrid Health Check is available for just £59 to offer the customer peace of mind.

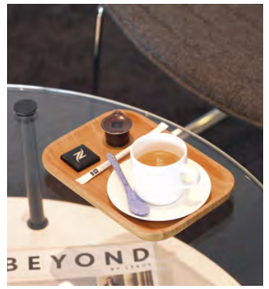

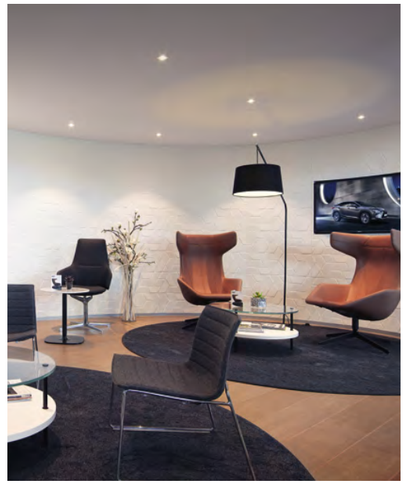

Throughout your vehicle's life, we'll endeavour to ensure an amazing ownership experience, offering unequalled service and seamless maintenance work, all orchestrated to provide complete satisfaction and total peace of mind. When you visit our showrooms, we strive to anticipate your every need and make available the finest facilities for you to enjoy in a warm and relaxed atmosphere. In the modern Lexus lounge, you can catch up on news, browse the Internet, or enjoy refreshments. While you relax, Lexus technicians will work with precision and efficiency to get you back on the road with minimum interruption to your day.

WE AIM TO TREAT EVERY CUSTOMER AS IF THEY WERE A GUEST IN OUR OWN HOME

Ever since we launched the first Lexus, we have always gone 'the extra mile' for our customers. Evidenced by countless awards over the last 30 years, we aim to treat every customer as if they were a guest in our home. But which other factors contribute to our peerless level of customer service? The answer lies in our Japanese heritage and one word: 'Omotenashi'

Omotenashi translates from the Japanese as 'hospitality and polite service'. However, Omotenashi is much more than excellence of service; it is an ancient Japanese concept that describes one's ability to anticipate the needs of another, even before they arise.

Omotenashi is a way of life and thinking for every single Lexus employee. Importantly, it also influences how we design and engineer cars like the IS. This is Omotenashi in physical form.

More about the IS:
lexus.co.uk/IS
GBNGL-IS420-VB
April 2020

Lexus created vehicles born from imaginative design, pioneering technology and craftsmanship. Only behind the wheel of one of our models can you truly experience amazing. Simply consult your local Lexus Centre to arrange a test drive at your convenience. To find out more about Lexus vehicles or to locate your local Lexus Centre, please visit our website www.lexus.co.uk or call 0845 278 8888 (calls cost 2p per minute plus your phone company's access charge).

Accuracy and specification
All information contained in this brochure was correct at the time of going to print. Please note that while every effort is made to reproduce accurate information, we reserve the right to change specification, equipment and availability without prior notice. Images shown in this brochure may not be of UK models (for example, they may show left-hand drive vehicles) and may illustrate equipment that is only available on selected grades. Therefore, this brochure cannot be regarded as infallible and, as such, does not constitute an offer for sale of any particular vehicle shown.

Fuel consumption and emissions data
†Figures are provided for comparability purposes; only compare fuel consumption and CO_2 figures with other cars tested to the same technical procedures. These figures may not reflect real life driving results. Fuel consumption and CO_2 produced varies significantly depending on a number of factors, including the accessories fitted (post-registration), driving style, conditions, speed and vehicle load. All models and grades are certified according to the World Harmonised Light Vehicle Test Procedure (WLTP). All mpg and CO_2 figures quoted are full WLTP figures.

The official CO_2 figures for vehicles have changed, due to a change in the official method of calculation. CO_2 figures are used in the calculation of Vehicle Excise Duty (car tax) for new cars during their first year of registration. As a result, all CO_2 figures, car tax and 'on the road' prices for new vehicles, which were provided or displayed prior to 1 April 2020, may now have changed for vehicles which were not registered before that date. These dates may change, please visit www.vehicle-certification-agency.gov.uk/fcb/wltp.asp for the latest information.

Choice of options and accessories fitted (pre-registration) may affect the official CO_2 figures, car tax and 'on the road' price.

For details of your preferred model and grade derivative, please contact your local Lexus Centre.

Safe driving
Lexus is committed to promoting safe and responsible driving at all times. None of the images contained in this brochure should be taken to promote any unsafe driving practice. All sound, entertainment and navigation accessories that may be included in our vehicles should always be used alongside legal and attentive driving. Additionally, any driver assistance and other safety features included in our vehicles are not designed to substitute safe and careful driving.

End-of-life vehicles
Taking care of the environment is a priority for Lexus. We strive to minimise the environmental impact of our vehicles throughout their life cycle – from design, production, distribution, sales and service to end-of-life. For more detailed information on environmental performance, please visit www.lexus.co.uk/environment

About Lexus
Lexus is a division of Toyota (GB) PLC registered in England & Wales with company number 0916634 with its registered office at Great Burgh, Burgh Heath, Epsom, Surrey KT18 5UX. Toyota (GB) PLC is an appointed representative of Toyota Insurance Management Limited and Toyota Financial Services (UK) PLC, both of which are authorised and regulated by the Financial Conduct Authority.

Printed Brochures
Lexus brochures are produced by printers that hold the environmental accreditation 'ISO 14001', and use paper that is FSC (Forest Stewardship Council) certified, which is sourced from sustainably managed forests. The inks used are vegetable oil based and the coatings are aqueous based. Once you have finished with this brochure, please pass it onto someone else to enjoy. If disposing of this brochure, please place it in a recycling bin.

LEXUS
EXPERIENCE AMAZING